440

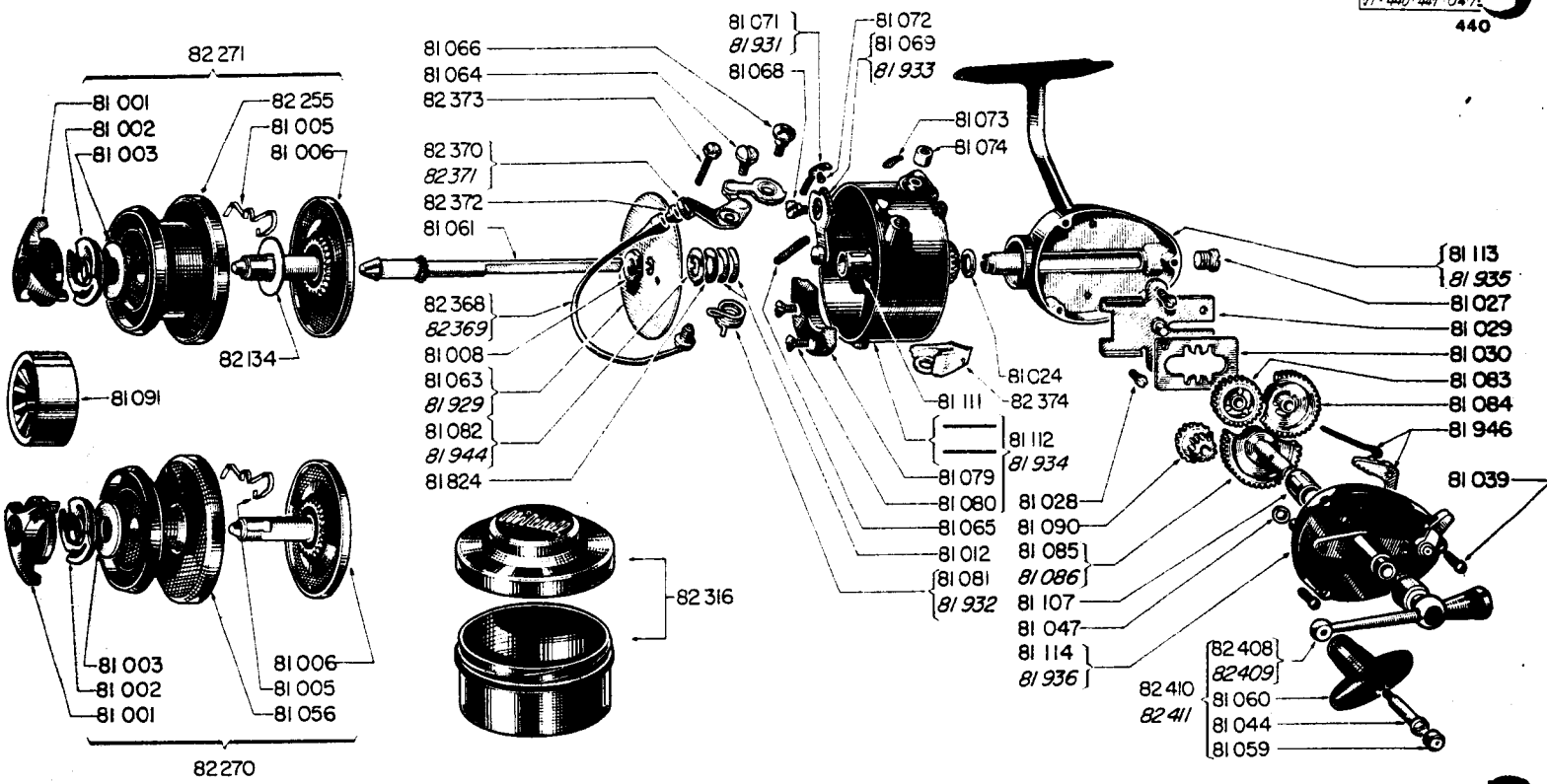

CODE NO.	DESCRIPTION	SUGGESTED RETAIL
81001	Drag Adjusting Knob	.60
81002	Brake Spring	1.05
81003	Teflon Drag Washer	.25
81005	Click Spring	.40
81006	Spindle	2.45
81008	Hex Nut	.25
81012	Shims to Adjust Head Baffle Plate	.25
81024	Shims to Adjust Head Housing	.45
81027	Lube Port Screw	.25
81028	Oscillation Guide Screw	.25
81029	Oscillation Guide	.95
81030	Oscillation Slide	.95
81039	Cover Screw	.25
81044	Handle Knob Screw	.60
81047	Shims to Adj. Pinion Gear	.25
*81056	Spool Large	6.50
81059	Knob Lube Port	.25
81060	Handle Knob	1.75
81061	Axle	2.40
81063	Baffle Plate	1.75
81064	Bail Pivot Screw	.45
81065	Trip Lever Spring	.45
81066	Bail Mount Screw	.60
81068	Trip Lever Screw	.25
81069	Trip Lever	3.00
81071	Bail Lock Spring	.60
81072	Bail Lock Screw	.25
81073	Bail Lock Button	1.15
81074	Bail Lock Bearing	.25
81079	Counterweight	1.20
81080	Counterweight Screw	.25
81081	Bail Spring	.60
81082	Keyed Washer	.25
81083	Pivot Gear	1.15
81084	Transfer Gear	1.15

CODE NO.	DESCRIPTION	SUGGESTED RETAIL
81085	Drive Gear	5.25
81086	Drive Gear	5.25
81090	Pinion Gear	3.00
81091	Spool Arbor	1.00
81107	Cover Plate Bearing	2.40
81111	Rotating Head Bearing	2.40
81112	Rotating Head	12.30
81113	Housing	8.05
*81114	Cover Plate	8.05
81824	Baffle Plate Washer	.25
81929	Baffle Plate	1.70
81931	Bail Lock Spring	.60
81932	Bail Spring	.60
81933	Trip Lever	3.00
81934	Rotating Head	12.30
81935	Housing	8.05
*81936	Cover Plate	8.05
81944	Keyed Washer	.25
81946	Anti Reverse Dog	.60
82134	Fiber Washer	.25
*82255	Spool Small	2.85
*82270	Spool Complete Large Less Container	5.50
*82271	Spool Complete Small Less Container	3.65
82316	Spool Container	1.10
82368	Bail Wire	5.25
82369	Bail Wire	5.25
82370	Bail Wire Mount	5.80
82371	Bail Wire Mount	5.80
82372	Roller Line Guide	.60
82373	Line Guide Screw	.50
82374	External Counterweight	2.30
*82408	Handle Shank	6.05
*82409	Handle Shank	6.05
*82410	Handle Complete	9.00
*82411	Handle Complete	9.00

*When present inventory is depleted, this part will be replaced by another number. Please refer to chart in back of book.